US009160257B2

(12) **United States Patent**
Hua et al.

(10) **Patent No.: US 9,160,257 B2**
(45) **Date of Patent: Oct. 13, 2015**

(54) **SOFT STARTER SYSTEM AND METHOD OF OPERATING SAME**

(71) Applicant: **Eaton Corporation**, Cleveland, OH (US)

(72) Inventors: **Yahan Hua**, Shanghai (CN); **Dongxiao Wu**, Shanghai (CN); **Bruno Patrice-Bernard Lequesne**, Menomonee Falls, WI (US); **David Lee Klapstein**, Burlington, WI (US); **Steven Andrew Dimino**, Wauwatosa, WI (US); **Kaijam M. Woodley**, Brown Deer, WI (US)

(73) Assignee: **Eaton Corporation**, Cleveland, OH (US)

(*) Notice: Subject to any disclaimer, the term of this patent is extended or adjusted under 35 U.S.C. 154(b) by 3 days.

(21) Appl. No.: **14/139,380**

(22) Filed: **Dec. 23, 2013**

(65) **Prior Publication Data**

US 2015/0180377 A1 Jun. 25, 2015

(51) **Int. Cl.**
H02P 1/16 (2006.01)
H02P 1/26 (2006.01)

(52) **U.S. Cl.**
CPC ***H02P 1/26*** (2013.01)

(58) **Field of Classification Search**
CPC H02P 1/26; H02P 1/28
USPC 318/778, 767, 727
See application file for complete search history.

(56) **References Cited**

U.S. PATENT DOCUMENTS

3,838,322	A	9/1974	Greenwell	
3,866,097	A	2/1975	Anzai et al.	
3,876,918	A	4/1975	Komuro et al.	
3,935,518	A	1/1976	Yatsuk et al.	
4,052,651	A	10/1977	Kamaike	
4,482,853	A *	11/1984	Bhavsar	318/778
5,272,428	A	12/1993	Spiegel et al.	
5,652,485	A	7/1997	Spiegel et al.	
5,774,630	A	6/1998	Lee et al.	
6,047,275	A	4/2000	Jaremko et al.	
6,208,111	B1 *	3/2001	Williams	318/778
6,414,463	B1	7/2002	Griepentrog et al.	

(Continued)

OTHER PUBLICATIONS

Sirius Soft Starter 3RW44 Manual, Siemens, Oct. 2010, pp. 5-1-5-5.

(Continued)

Primary Examiner — David S Luo
(74) *Attorney, Agent, or Firm* — Ziolkowski Patent Solutions Group, SC

(57) **ABSTRACT**

A system and method for automatically defining and tuning operating parameters for a motor control device with minimal or no operator input is disclosed. The system includes a motor control device electrically connectable to an AC motor and a controller that is programmed to define a motor start-up function based on a rated current of the motor, the motor start-up function comprising an initial torque factor and an initial ramp time. The controller also triggers switching devices of the motor according to the motor start-up function to inject current into the motor during a first trial run, monitors operating conditions of the motor and motor control device during the first trial run, modifies the motor start-up function based on the monitored operating conditions, and triggers the plurality of switching devices according to the modified motor start-up function to inject current into the motor during a subsequent trial run.

22 Claims, 8 Drawing Sheets

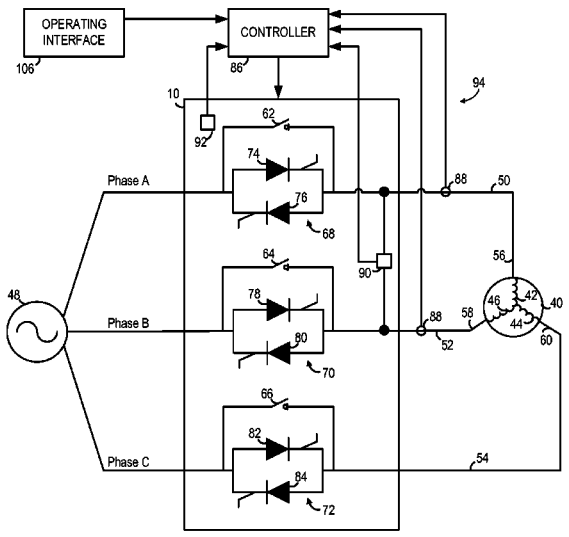

(56) **References Cited**

U.S. PATENT DOCUMENTS

6,420,848	B1	7/2002	Gritter et al.	
6,594,592	B1	7/2003	Griepentrog et al.	
6,757,665	B1	6/2004	Unsworth et al.	
6,781,342	B2 *	8/2004	Tolbert et al.	318/784
6,914,398	B2	7/2005	Ohlsson et al.	
7,791,307	B2	9/2010	Bilac et al.	
7,952,318	B2	5/2011	Lu et al.	
8,138,702	B2	3/2012	Nolemo et al.	
8,203,298	B2	6/2012	Lu et al.	
8,487,561	B2	7/2013	Balcon et al.	

OTHER PUBLICATIONS

S811 Soft Starter User Manual, Eaton Cutler-Hammer IT, Nov. 2006, Revision 6.

S811 Soft Starter Installation and Setup Guide, Eaton Cutler-Hammer IT, Nov. 2006.

Deleroi et al., "Analysis and Application of Three-Phase Induction Motor Voltage Controller with Improved Transient Performance," IEEE Transactions on Industry Applications, vol. 25, No. 2, Mar./Apr. 1989, pp. 280-286.

Sastry et al., "Optimal Soft Starting of Voltage-Controller-Fed IM Drive Based on Voltage Across Thyristor," IEEE Transactions on Power Electronics, vol. 12, No. 6, Nov. 1997, pp. 1041-1051.

Zenginobuz et al., "Performance Optimization of Induction Motors During Voltage-Controlled Soft Starting," IEEE Transactions on Energy Conversion, vol. 19, No. 2, Jun. 2004, pp. 278-288.

Oliveira et al., "Direct Torque Control of Induction Motor Soft Starting," IEEE Power Electronics Conference, 2009, COBEP '09, pp. 512-516.

Nied et al, "Soft Starting Induction Motor with Torque Control," IEEE Transactions on Industry Applications, vol. 46, No. 3, May/Jun. 2010, pp. 1002-1010.

Novotny et al., "Vector Control and Dynamics of AC Drives," Oxford Science Publications, Clarendon Press, Novotny and Lipo, 1996, p. 77.

Prasad et al., "Rapid Prototyping Tool for a Fuzzy Logic Based Soft-Starter," IEEE, 1997, pp. 877-880.

Li et al., "Design of Intelligent Soft-Start Controller for Induction Motor," Proceedings of the Third International Conference on Machine Learning and Cybernetics, Shanghai, Aug. 26-29, 2004, pp. 908-912.

Filippetti et al., "Recent Developments of Induction Motor Drives Fault Diagnosis Using AI Techniques," IEEE Transactions on Industrial Electronics, vol. 47, No. 5, Oct. 2000, pp. 994-1004.

Yufang et al., Research and Design of an Intelligent Liquid-state Softstarter, 2010 International Conference on Electrical and Control Engineering, pp. 1562-1565.

* cited by examiner

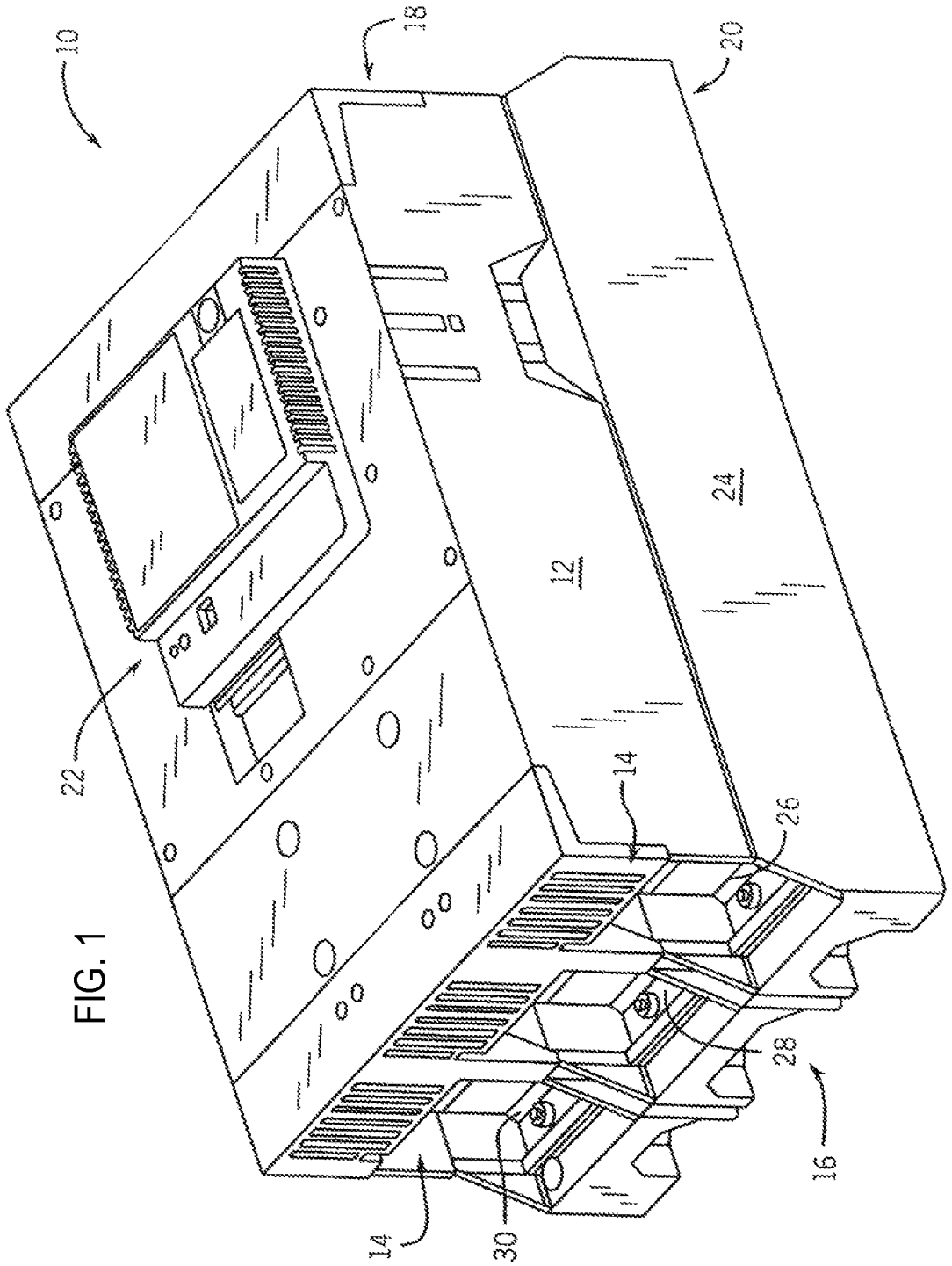

FIG. 1

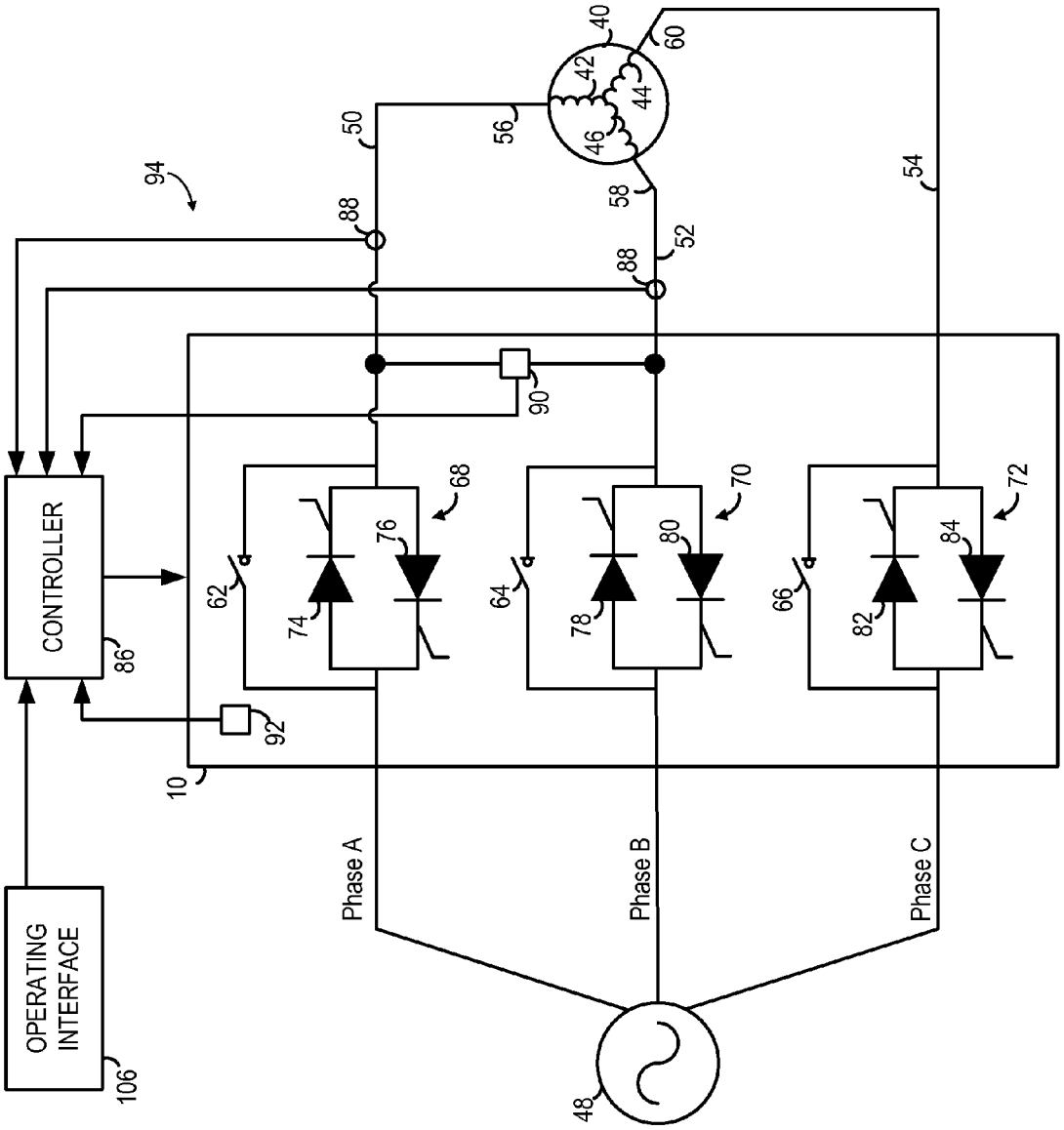
CONTROLLER
OPERATING INTERFACE
Phase A
Phase B
Phase C
10
40
42
44
46
48
50
52
54
56
58
60
62
64
66
68
70
72
74
76
78
80
82
84
86
88
88
90
92
94
106

FIG. 2

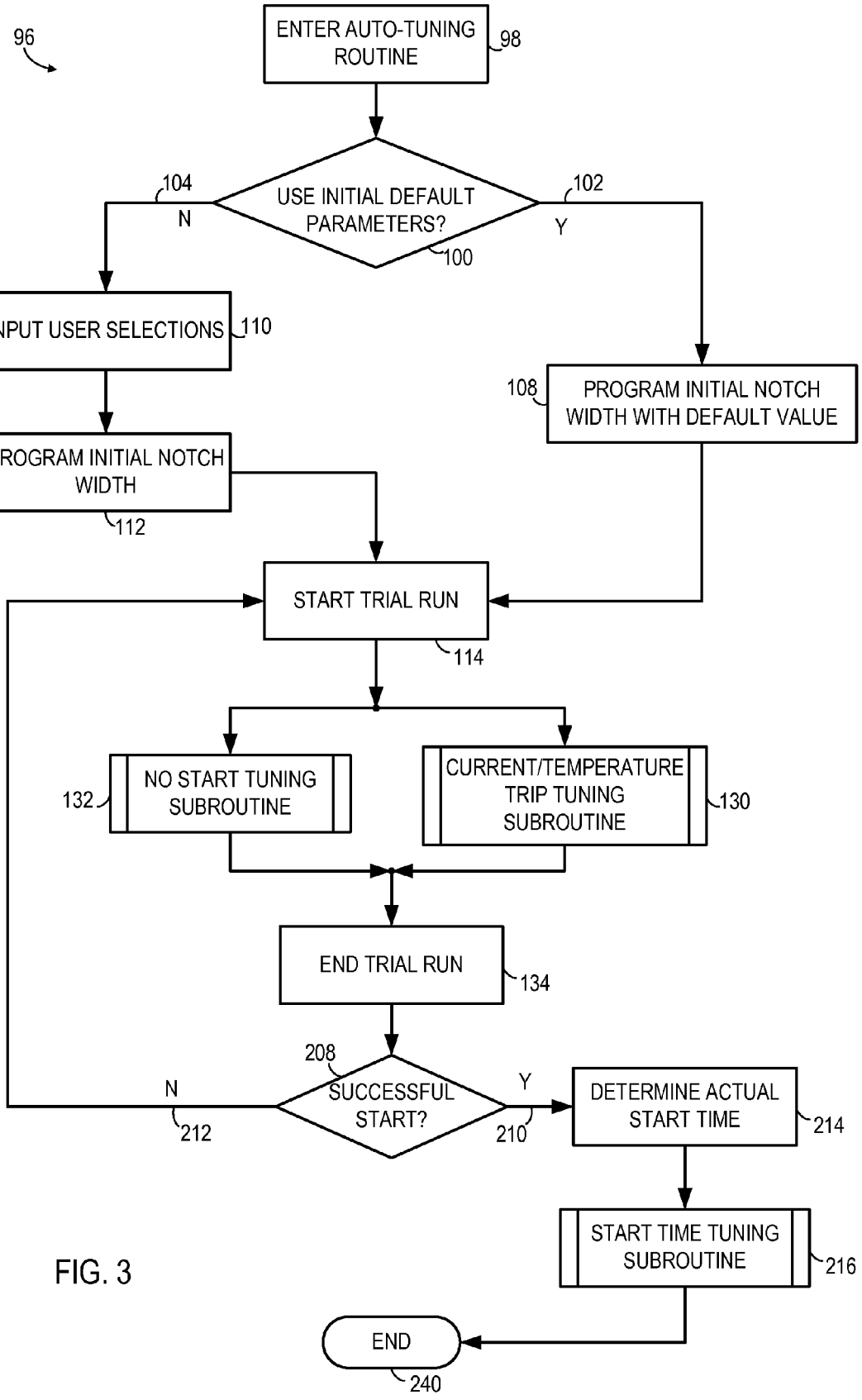
96
ENTER AUTO-TUNING ROUTINE
98
USE INITIAL DEFAULT PARAMETERS?
100
104
N
102
Y
INPUT USER SELECTIONS
110
PROGRAM INITIAL NOTCH WIDTH
112
108
PROGRAM INITIAL NOTCH WIDTH WITH DEFAULT VALUE
START TRIAL RUN
114
NO START TUNING SUBROUTINE
132
CURRENT/TEMPERATURE TRIP TUNING SUBROUTINE
130
END TRIAL RUN
134
208
SUCCESSFUL START?
N
212
Y
210
DETERMINE ACTUAL START TIME
214
START TIME TUNING SUBROUTINE
216
END
240

FIG. 3

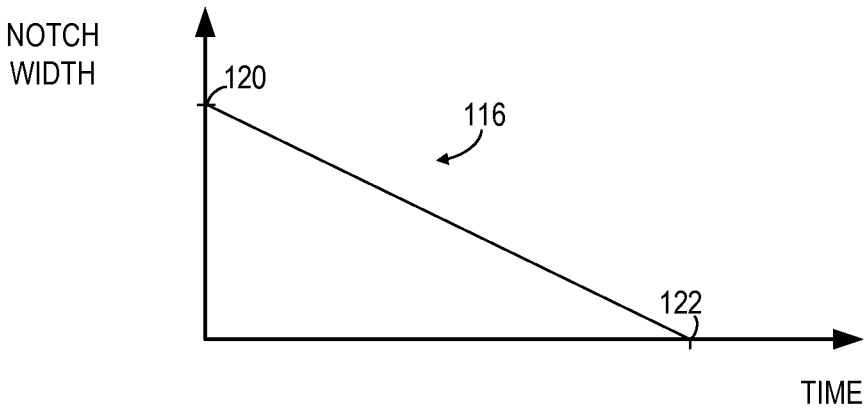

FIG. 4

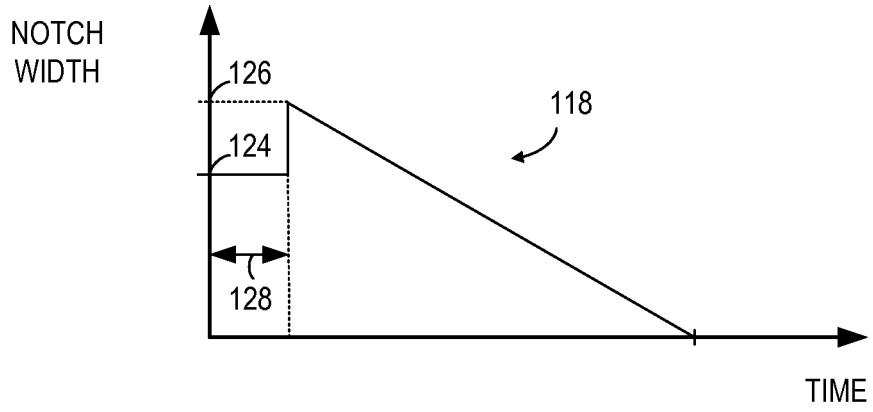

FIG. 5

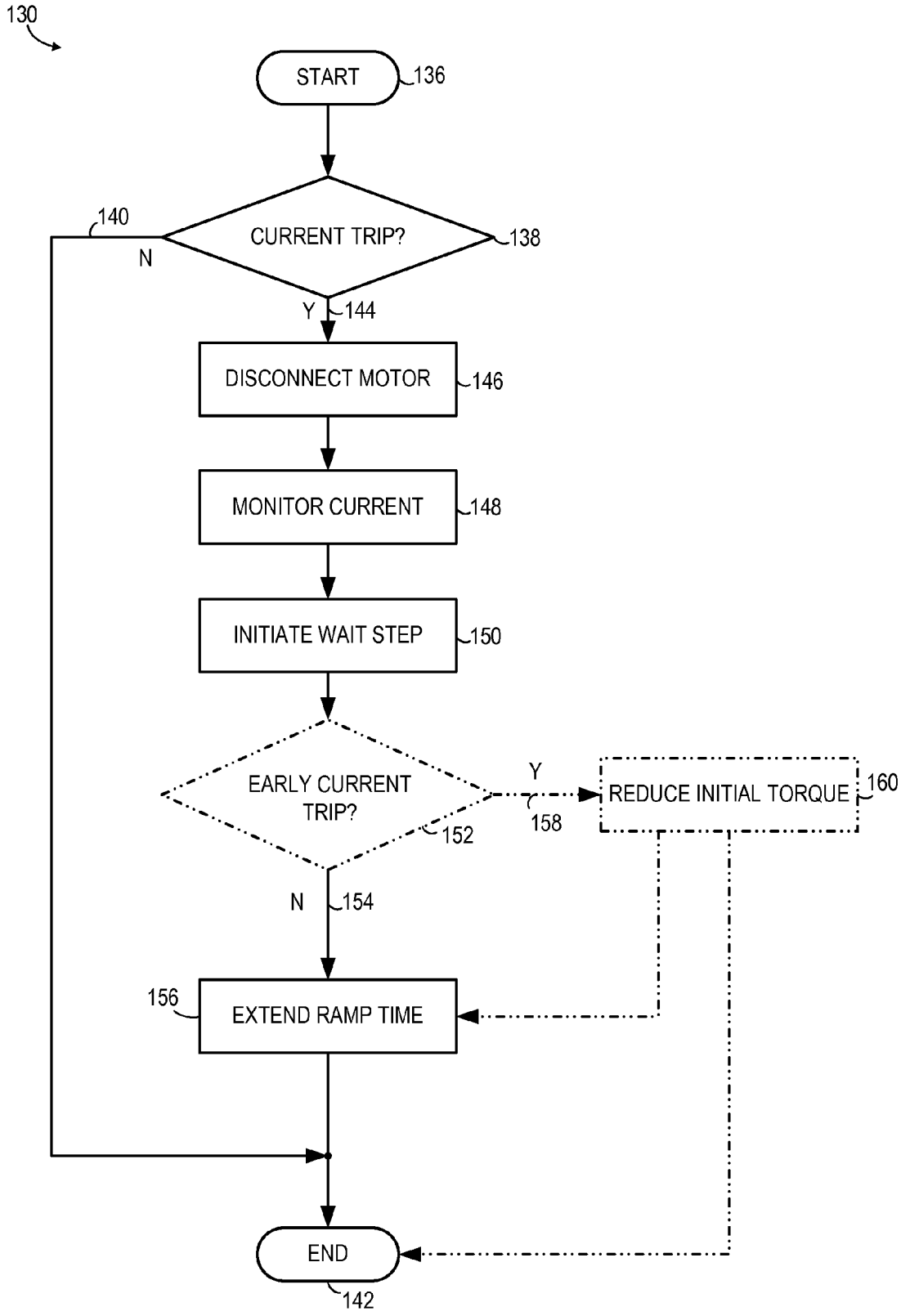
130
START
136
CURRENT TRIP?
138
140
N
Y
144
DISCONNECT MOTOR
146
MONITOR CURRENT
148
INITIATE WAIT STEP
150
EARLY CURRENT TRIP?
152
Y
158
REDUCE INITIAL TORQUE
160
N
154
156
EXTEND RAMP TIME
END
142

FIG. 6

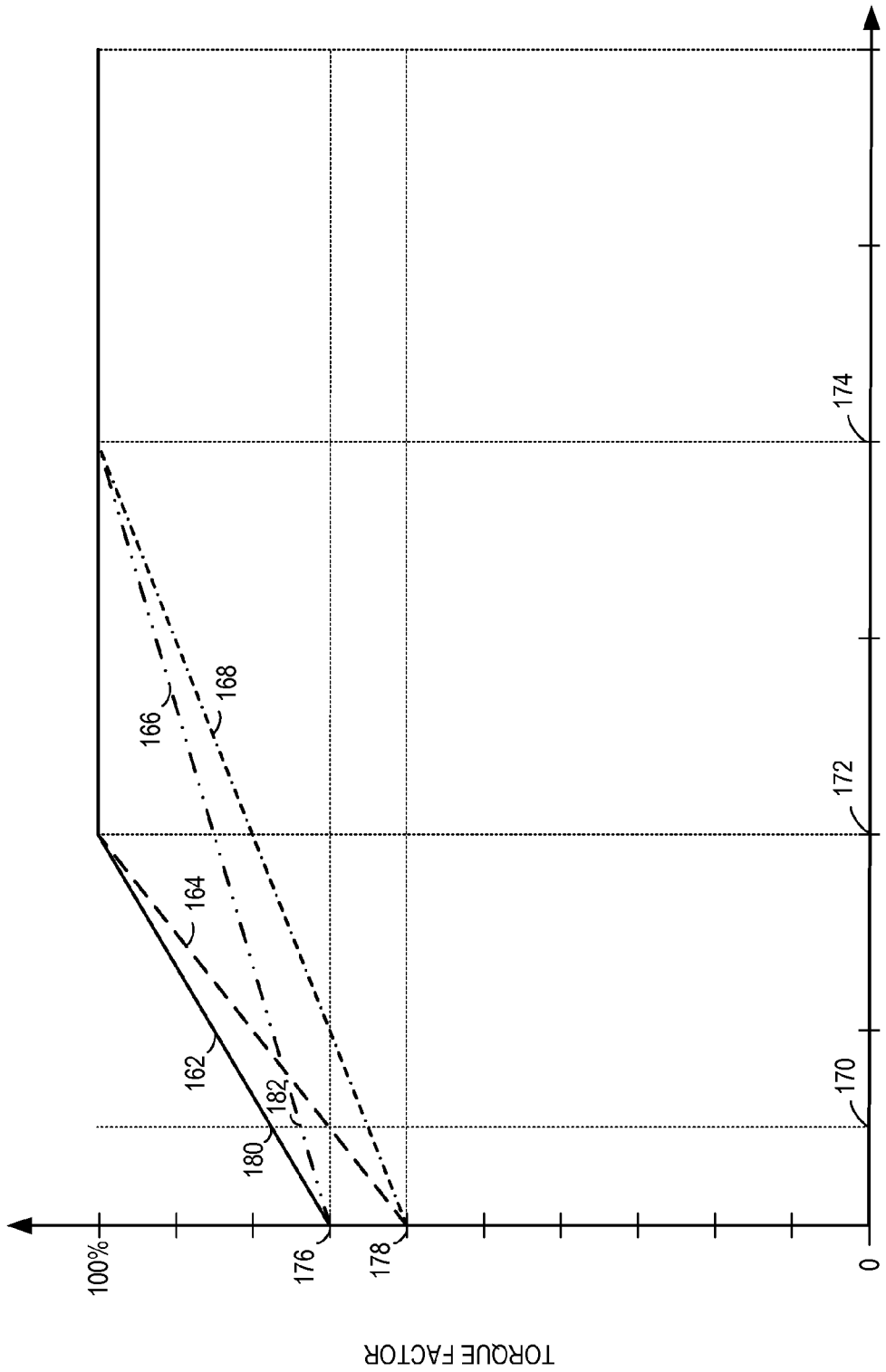
TORQUE FACTOR
100%
0
TIME
162
164
166
168
170
172
174
176
178
180
182

FIG. 7

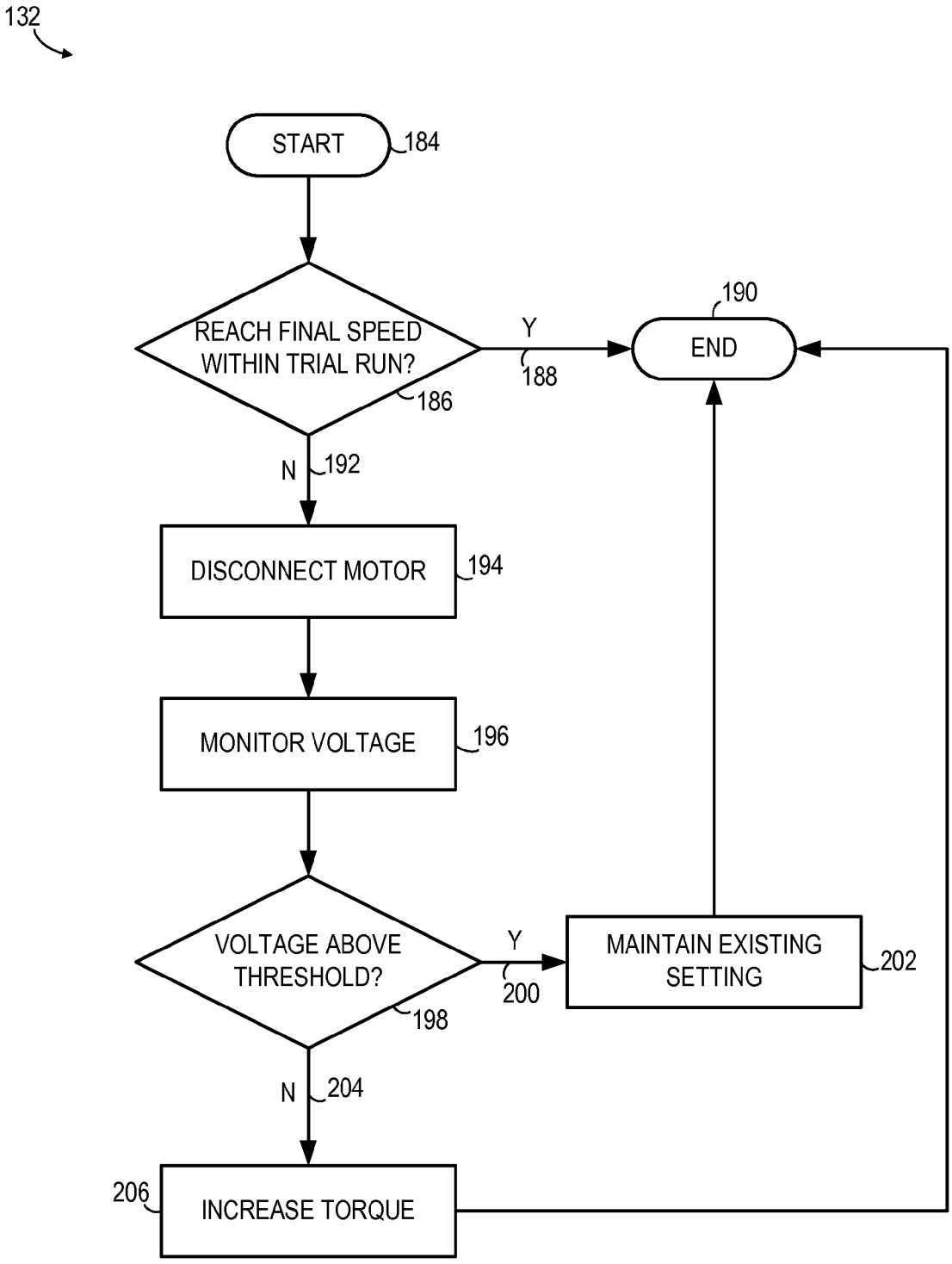
132
START
184
REACH FINAL SPEED WITHIN TRIAL RUN?
186
Y
188
END
190
N
192
DISCONNECT MOTOR
194
MONITOR VOLTAGE
196
VOLTAGE ABOVE THRESHOLD?
198
Y
200
MAINTAIN EXISTING SETTING
202
N
204
206
INCREASE TORQUE

FIG. 8

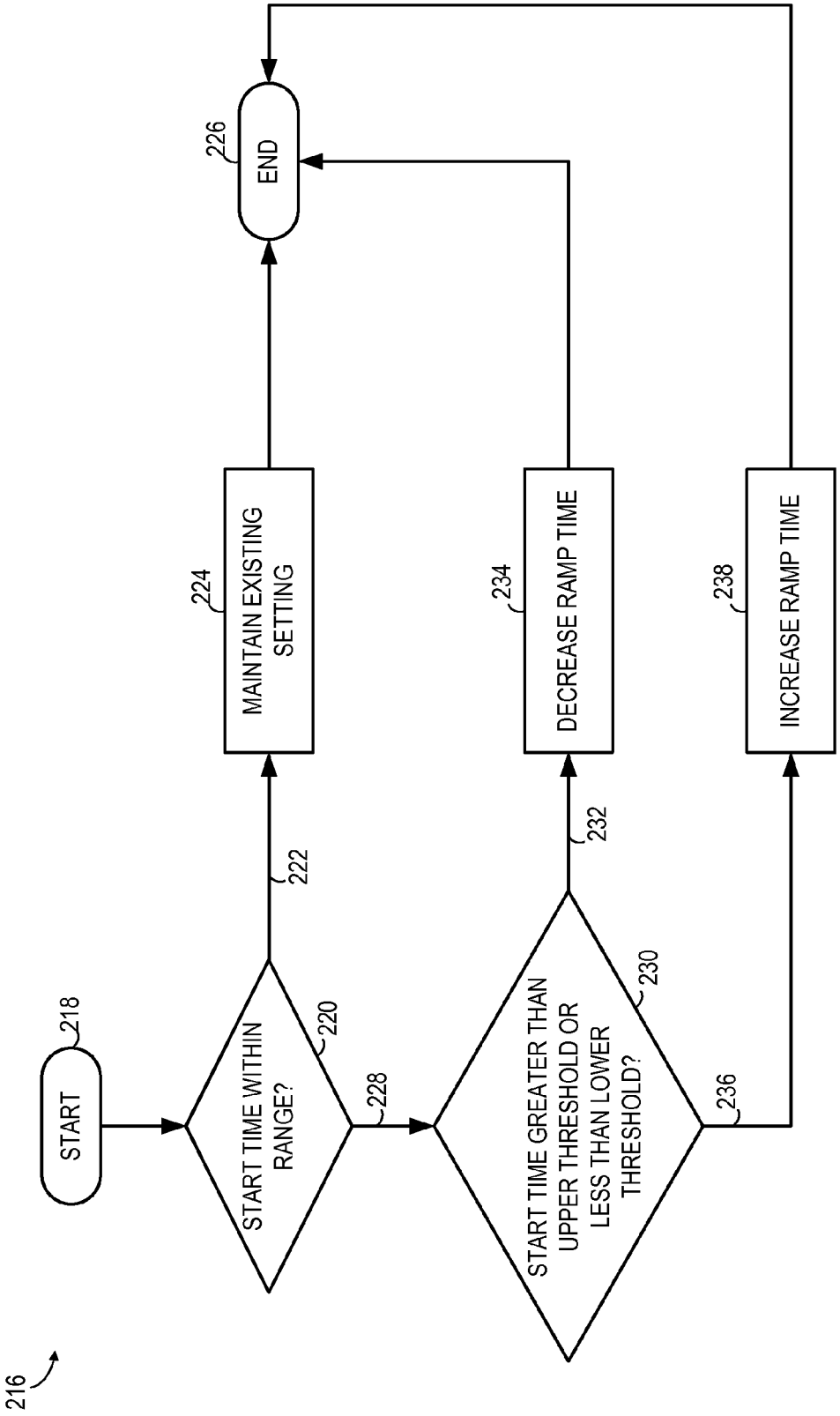
216
START
218
START TIME WITHIN RANGE?
220
222
MAINTAIN EXISTING SETTING
224
228
START TIME GREATER THAN UPPER THRESHOLD OR LESS THAN LOWER THRESHOLD?
230
232
DECREASE RAMP TIME
234
236
INCREASE RAMP TIME
238
END
226

FIG. 9

SOFT STARTER SYSTEM AND METHOD OF OPERATING SAME

BACKGROUND OF THE INVENTION

Embodiments of the invention relate generally to alternating current (AC) motors and, more particularly, to an automated system and method for defining operating parameters for a soft starter.

Motor soft starters are devices that control transmission of voltage and current from an AC power source to an induction motor. Soft starters are configured to limit the transient voltages and current inrush to the induction motor during start-up, resulting in a "soft" motor starting. In operation, power from the AC source is passed through switching devices in the soft starter, such as a pair of anti-parallel or back-to-back solid state switches in the form of thyristors or silicon controlled rectifiers (SCRs), to control the current flow and, in turn, the terminal voltages of the induction motor.

In general, the soft starter temporarily reduces torque in a powertrain of the motor during startup via selective control of the thyristors. This reduction allows for reduced stresses on the motor and electrical network, which increases the life of the system. The thyristors are controlled to turn on at a given angle, γ, as measured when the voltage becomes positive. The resulting currents flow through the given phases until they reach zero, at which point the thyristors turn off. This pattern creates a "notch" in the voltage. The larger the notch width, the smaller the rms voltage applied to the motor. Since torque is a function of the square of the rms voltage, the larger the notch width, the smaller the torque. If the notch width is zero, full voltage is applied to the motor. Typically, the soft starting process lasts a few seconds, at the end of which the system reaches its final speed and contactors are closed to bypass the soft starter.

In order to operate typical motor soft starters, the operator must manually enter multiple operating parameters into a user interface to define the turn on angle of the thyristor and resulting notch width profile of the soft starter throughout the soft starting process. These operating parameters include a suitable starting time, a current limit, an initial torque, a torque limit, a notch width, and a kick-start duration and kick-start torque (if applicable). Typically, operating parameters are manually selected based on suggestions in a user manual or based on input from field engineers. Correctly setting the parameters for various motors and loads that result in reliable smooth starts based on this trial-and-error parameter selection can be difficult since machine and load evaluation must be taken into account to determine a correct starting pattern.

Accordingly, it would be desirable to have a system that automatically defines the operating parameters for a soft starter with minimal user input. It would also be desirable for such a soft starter system to recalculate and adjust the operating parameters over time to increase the probability of a motor start and account for load changes over time.

BRIEF DESCRIPTION OF THE INVENTION

The present invention provides a system and method for automatically defining and tuning operating parameters for a motor soft starter.

According to one aspect of the invention, a motor control device that is electrically connectable to an AC motor includes a plurality of switching devices comprising at least one switch corresponding to a respective phase of the AC motor and a controller. The controller is programmed to define a motor start-up function based on a rated current of the AC motor, the motor start-up function comprising an initial torque factor and an initial ramp time, and trigger the plurality of switching devices according to the motor start-up function to inject current into the AC motor during a first trial run. The controller is also programmed to monitor operating conditions of at least one of the AC motor and the motor control device during the first trial run, modify the motor start-up function based on the monitored operating conditions, and trigger the plurality of switching devices according to the modified motor start-up function to inject current into the AC motor during a subsequent trial run.

According to another aspect of the invention, a method for controlling a AC motor includes providing a motor control device having a plurality of switching devices to condition voltage and current to the AC motor, providing a sensor system to sense operating conditions of the motor control device and the AC motor, and coupling the motor control device between an AC power source and the AC motor. The method also includes automatically generating a first notch width function from an initial set of operating parameters, controlling the plurality of switching devices according to the first notch width function during a first motor start-up attempt, automatically modifying the first notch width function based on feedback received from the sensor system during the first motor start-up attempt, and controlling the plurality of switching devices according to the modified notch width function during a second motor start-up attempt.

According to yet another aspect of the invention, a soft-starter is provided to control transmission of voltage and current from an AC power source to an induction motor. The soft-starter includes a plurality of supply lines, each supply line corresponding to a phase in the induction motor and a plurality of solid-state switches comprising at least one solid-state switch located on each of the plurality of supply lines to condition a motor line voltage and a phase current to the induction motor. The soft-starter also includes a processor programmed to trigger the plurality of solid-state switches according to a motor start-up function and automatically modify at least one operating parameter of the motor start-up function absent operator input. The processor is further programmed to automatically update the motor start-up function using the modified at least one operating parameter and trigger the plurality of solid-state switches according to the updated motor start-up function.

Various other features and advantages of the present invention will be made apparent from the following detailed description and the drawings.

BRIEF DESCRIPTION OF THE DRAWINGS

The drawings illustrate preferred embodiments presently contemplated for carrying out the invention.

In the drawings:

FIG. **1** is a perspective view of a soft starter for use with embodiments of the present invention.

FIG. **2** is a schematic view of an AC motor system incorporating a soft starter according to an embodiment of the invention.

FIG. **3** is a flowchart illustrating a technique for determining and modifying soft starter operating parameters according to an embodiment of the invention.

FIG. **4** is an exemplary notch width function for starting a motor without a kick-start, according to an embodiment of the invention.

FIG. **5** is an exemplary notch width function for starting a motor with a kick-start, according to an embodiment of the invention.

FIG. **6** is a flowchart illustrating a subroutine of the technique of FIG. **3** that tunes operating parameters of a notch width function based on a monitored current value, according to an embodiment of the invention.

FIG. **7** illustrates exemplary plots of torque factor over time used to start a motor before and after an overcurrent condition has been detected, according to various embodiments of the invention.

FIG. **8** is a flowchart illustrating a subroutine of the technique of FIG. **3** that tunes operating parameters of a notch width function based on a monitored motor speed at the end of a trial run, according to an embodiment of the invention.

FIG. **9** is a flowchart illustrating a subroutine of the technique of FIG. **3** that tunes a ramp time of a notch width function based on an actual start time of a motor, according to an embodiment of the invention.

DETAILED DESCRIPTION

The embodiments of the invention set forth herein relate to a system and automated method for generating and tuning a start-up profile or notch width function for a motor soft starter with minimal user input. While embodiments of the invention are described herein as being used in connection with a multi-phase AC power source, one skilled in the art will recognize that embodiments of the invention are applicable to single-phase AC power sources.

Referring to FIG. **1**, a motor control device **10** is shown that can be used in implementing embodiments of the invention set forth below. In an exemplary embodiment of the invention, motor control device **10** comprises a soft starter configured to limit the transient voltages and current to a multi-phase AC motor during motor start-up, and will be referred to such herein. Soft starter **10** includes a cover assembly **12** having air inlets **14** on a motor connection end, or load end **16**. Similar air outlets **18** are located on a power source end, or line end **20** of the soft starter **10**. The cover assembly **12** also houses an electronic controller **22**. Soft starter **10** also includes a base assembly **24** to house each of switch assemblies **26**, **28**, **30**. Each of the switch assemblies **26-30** is identical in construction for a given soft starter **10** and corresponds to a given phase of a multi-phase input to the multi-phase AC motor.

It is recognized that soft starter **10** illustrated in FIG. **1** is merely an example of a soft starter architecture/structure that may used in implementing embodiments of the invention, and that other various soft starter architectures/structures used or required to meet specific application requirements are also understood to be included within the scope of the invention. For example, a range of open chassis soft starter configurations could be used in implementing embodiments of the invention rather than the housed soft starter shown in FIG. **1**.

Referring to FIG. **2**, a three-phase, induction motor or AC motor **40** is schematically shown according to an embodiment of the invention, and is generally designated by the reference numeral **40**. As is conventional, AC motor **40** is represented as three stator windings **42**, **44**, **46**. In this case, AC motor **40** is shown connected in a wye-arrangement. It can be appreciated that AC motor **40** may alternatively, and according to the equivalents of the invention, be connected in a delta arrangement without deviating from the scope of the invention. Stator windings **42-46** of AC motor **40** are operatively connected to an AC power source **48** through corresponding multi-phase supply lines **50**, **52**, **54**, at motor terminals **56**, **58**, **60**.

In the embodiment shown in FIG. **2**, soft starter **10** is connected between AC power source **48** and AC motor **40** and is located outside the AC motor **40** (i.e., outside the delta). Alternatively, soft starter **10** may be positioned inside the AC motor **40** (i.e., inside the delta). As one skilled in the art will recognize, the embodiments described herein may be adapted for such a configuration.

Soft starter **10** is configured to limit the transient voltages and current to AC motor **40** during start-up, resulting in a "soft" motor starting. The basic structure of soft starter **10** is shown in FIG. **2** (i.e., circuitry of the soft starter) as including a contactor **62**, **64**, **66** corresponding to each supply line **50-54** or each phase of the supply power. Soft starter **10** also includes a switching device **68**, **70**, **72** on each supply line **50-54**. In an exemplary embodiment each switching device **68-72** is formed of a pair of anti-parallel switches, such as solid-state switches in the form of thyristors or silicon controlled rectifiers (SCRs), to control the current flow and, in turn, the terminal voltages of the motor **40**. As shown, switch pair **68** includes thyristors **74**, **76** which are opposite in polarity and are connected in parallel for supply line **50**. Likewise, switch pair **70** includes thyristors **78**, **80**, which are opposite in polarity and are connected in parallel for supply line **52**. Finally, switch pair **72** includes thyristors **82**, **84**, which are opposite in polarity and are connected in parallel for supply line **54**. In a preferred embodiment, thyristors **74**, **78**, **82** are forward conducting and thyristors **76**, **80**, **84** are backward conducting.

While each phase is shown as including a pair of thyristors **74-84**, it is also envisioned that soft starter **10** could have a pair of thyristors on only one or two supply lines (e.g., only supply line **50**). Additionally, it is also recognized that, for a specified supply line, a thyristor could be arranged in parallel with a diode rather than another thyristor. In any of the embodiments described above a thyristor **74-84** on a single supply line can be controlled to distort the input voltage and current received by AC motor **40**, as described below.

Also included in soft starter **10** is a controller or processor **86** configured to control operation of thyristors **74-84** via the transmission of gate drive signals thereto, as well as to control opening and closing of contactors **62-66**. During start-up/ramp-up of AC motor **40** (and similarly during a ramp-down), soft starter **10** operates in a "start-up" or "ramping" mode, during which controller **86** causes one or more of contactors **62-66** corresponding to supply lines **50-54** to open such that the power from AC source **48** passes through thyristor pairs **68-74**, thus controlling the current flow (and therefore the voltage) applied to the AC motor **40**. Subsequent to start-up of AC motor **40**, the soft starter **10** enters a "bypass" mode in which controller **86** causes the contactor **62-66** on each supply line **50-54** to close, so as to bypass the switching devices **68**, **70**, **72** and minimize power dissipation. The bypass mode thus is considered the "normal" mode of operation for the soft starter **98** and AC motor **40**.

During operation of soft starter **10**, ongoing processing occurs within the soft starter **98** in which measurements and/or calculations of the current being drawn by AC motor **40** are performed. Data for these measurements and/or calculations is acquired from a set of current sensors **88**. In one embodiment, these measurements and/or calculations are performed at approximately every half cycle of the input line frequency. However, these measurements and/or calculations may be performed more or less frequently in alternative embodiments. In the illustrated embodiment, the set of current sensors **88** includes current sensors in two of the three phases. Alternative embodiments may include a respective current sensor for each of the three phases or a single sensor used in

just one of the phases. Soft starter **10** is also equipped with one or more voltage sensors **90** that measures the voltage across the switching devices. While only one voltage sensor is illustrated in FIG. **2**, alternative embodiments may include one or more additional voltage sensors. A temperature sensing unit **92**, comprising one or more temperature sensors, is also provided to monitor the temperature of soft starter **98**. Together, the current sensor, voltage sensor(s), and temperature sensing unit (if used) form a sensor system **94** that provides feedback to controller **86**.

An automated technique **96** for determining and tuning operating parameters that define a motor start-up function or notch width profile for operating soft starter **10** is illustrated in FIG. **3**, according to an embodiment of the invention. In general, technique **96** defines a first notch width or turn-on angle, γ, as a function of time, modifies this selection until an appropriate or acceptable motor start is obtained, monitors behavior of the motor start-up system over time, and continuously adjusts the selection based on the monitored behavior to maintain start quality. Because technique **96** operates with little to no operator input and automatically tunes the motor start-up profile for subsequent motor starts based on monitored operating conditions of the motor and soft starter, technique **96** generates a robust and reliable motor start-up profile.

Technique **96** performs the automated tuning of the motor start-up profile or notch width profile in a number of steps that can generally be divided into four main stages: an initial stage for system set-up, a second stage wherein initial operating parameters are selected, a third stage that includes a search for a set of operating parameters for a successful first run or motor start-up (that is, a run in which final motor speed is reached, albeit possibly not smoothly or optimally), and a final stage that includes a search for a set of operating parameters for a smooth run or motor start-up (that is, a run in which final motor speed is reached smoothly or optimally). While the various steps of technique **96** are described herein as falling within four general stages, the division of the steps of technique **96** into a certain number of defined stages is done herein to facilitate explanation of technique disclosed herein. One skilled in the art will recognize that the steps of technique **96** may be divided into more or less than four stages in alternative embodiments without deviating from the general scope of the invention.

The system set-up stage of technique **96** begins at step **98** when the soft starter controller, such as controller **86** of FIG. **2**, enters the auto-tuning routine in which soft starter operating parameters will be automatically determined and tuned. At step **100** technique **96** determines whether to use the initial default operating parameters for the soft starter. These default parameters may include, for example, manufacturer default settings for notch width and ramp time and/or a minimum full load amperes (FLA) value determined from the low end of the horsepower range of the given soft starter. The full load amperes (FLA) value is the rated value of current for the motor, that provides rated torque at rated speed. The decision to use the initial default operating parameters, **102**, or not use the initial default operating parameters, **104**, may be made as a result of a user input on an operating interface of the soft starter, such as operating interface **106** (FIG. **2**). Alternatively technique **96** may be programmed to automatically proceed using default parameters and absent any operator input. If technique **96** is to proceed with using the initial default operating parameters **102**, technique **96** programs controller **86** to operate the soft starter according to a motor start-up profile defined by a first notch width profile based on a default value at step **108**.

Alternatively, if technique **96** is to proceed without using the initial default operating parameters **104**, technique **96** receives one or more user input selections at step **110**. In a preferred embodiment, the user input selection is a single numerical value that corresponds to the full load amperes (FLA) of the motor. Alternatively, the user input selection may include one or more inputs related to motor nameplate data and, optionally, one or more additional user selections as described below. These user input selections may be made following prompts provided to the user on the operating interface **106**, according to one embodiment. The motor nameplate data may include one or more of the following: motor power rating, a rated current or full load amperes (FLA), rated power factor, rated voltage, or rated efficiency, as examples.

Optionally, the user may input one or more additional inputs at step **110**, including an expected start time for the motor (defined herein as t_user_start), a user-defined current limit value, and information related to the type of application or load for which the soft starter is used. Non-limiting examples of such applications or loads include a pump, fan, centrifuge, conveyor belt, crusher, high-inertia load, and the like. The user may input this information through a drop-down menu or other selection tool provided on the operating interface **106** that permits the user to select one or multiple application entries, such as, for example "pump" and "high-inertia load".

After the user input selections are received, technique **96** enters the second stage of the auto-tuning routine and defines a first notch profile or initial motor start-up profile for a trial run by selecting the first notch width or turn-on angle, γ, as a function of time at step **112** based on the user input selections.

Technique **96** initiates an initial or first trial run at step **114**. The operating parameters of the first trial run are determined based on the first notch width profile programmed either at step **108** or step **112**. Two exemplary first notch width profiles are illustrated in FIG. **4** and FIG. **5**. FIG. **4** illustrates a general linear notch width profile **116**; FIG. **5** illustrates a notch width profile for a kick-start application **118**. Referring first to FIG. **4**, the operating parameters of the trial run are initially defined as a ramp function that begins at an initial notch width **120** and that decreases linearly to zero at time point **122** (defined herein as t_ramp). In the case of a kick-start application as illustrated in FIG. **5**, the initial kick-start torque factor or initial kick-start notch width **124** is selected as a value less than an initial torque factor or initial ramp notch width **126**. The soft starter operates at the initial kick-start notch width **124** for a kick-start duration **128**, after which the notch width is increased to the initial ramp notch width **126**.

According to one embodiment, the initial notch width **120** or initial ramp notch width value of the ramp function **126** is defined according to:

$$\text{Notch Width} = \text{maxNotch} - (k\_\text{torque} * (\text{maxNotch} - \text{minNotch})/100) \quad \text{(Eqn. 1)},$$

where maxNotch and minNotch are predefined maximum and minimum notch angles and k_torque is defined as a percentage value (e.g., 50%) that indirectly determines the initial torque. The variable k_torque is referred to hereafter as an initial torque factor. In one embodiment, the initial torque factor is selected as percentage value between approximately 45-50%.

If the operator entered an expected start time value, t_user_start, into the operator interface at step **110**, the initial ramp time, t_ramp, is initially defined based on t_user_start. In one embodiment t_ramp is defined as a predefined multiple, x, of t_user_start, according to t_ramp=x(t_user_start). The predefined multiple, x, is a scalar value such as, for

example, 1 or 1.5 or 2. Alternatively, if the user did not enter an expected start time value at step **110**, technique **96** uses a default value for t_ramp. This default value may vary based on the type of start, which may be determined based on a received user input indicating the type of application or load for which the soft starter is used, if available. For example, the default value of t_ramp may be set as 60 seconds in a normal start application or 180 seconds in an extended start application, such as an application associated with a high inertia load, centrifuge, or similar system.

Referring again to FIG. **3**, after the initial operating parameters are determined for the motor start-up profile of the trial run, technique **96** enters the third stage of the auto-tuning routine during which a set of operating parameters for a first successful run or start are sought out while running a set of tuning subroutines at steps **130** and **132**. During steps **130**, **132** technique **96** attempts a motor start up by operating the soft starter according to the operating parameters defined at step **108** or step **112**. During the duration of this start-up attempt, operating conditions of the motor and soft starter, such as voltage, current, and temperature, are monitored and corrective actions are taken, if appropriate, based on the monitored operating conditions, as described below. Based on the outcome of the subroutines operating at steps **130** and **132**, one or more of the operating parameters of the motor start-up may be modified for use in the subsequent trial run or subsequent start-up attempt. The trial run ends at step **134**.

According to one embodiment, the duration of this first or initial trial run is set at a predefined value, such as 10 seconds for a normal start up application or 60 seconds for an extended start application. These trial run duration values are provided as examples only and other default values may be used within the scope of the invention. Alternatively, the trial run duration time may be defined as a function of the power rating of the motor or load. For example, for a low power motor, the trial run duration may be defined as a shorter time period, such as 10 seconds, extending proportionally to a longer time period, such as 15 seconds, for a high power motor. As yet another alternative, the duration of the trial run may be defined as being equal to or a predefined fraction of the user-provided start time, t_user_start.

Throughout the duration of the trial run, technique **96** runs a current trip tuning subroutine **130**, the details of which are illustrated in FIG. **6**. In general, the current trip tuning subroutine **130** operates to lengthen the ramp time and, in cases where an early trip occurs, reduce the initial torque factor of the notch profile used in a subsequent trial run. Tuning subroutine **130** starts at step **136** and monitors for a current trip at step **138** using current sensors **88** (FIG. **2**). A current trip is identified if the monitored current exceeds a current threshold value. In one embodiment, the current threshold value is set as a multiple of the FLA, such as, for example, three times the FLA or four times the FLA. Alternatively, the current limit may be input by an operator at step **110**. If the current does not exceed the current threshold during the trial run **140**, tuning algorithm subroutine **130** ends at step **142**. This current trip value is an operating parameter for soft starter set-up, which may be modified by the user depending on a number of factors. Other, generally higher, current thresholds are generally used for protection, to operate circuit breakers and other hardware. Such higher current thresholds are not part of technique **96** except to interrupt it in case of a fault, as is done in the art to protect electrical circuits and machinery.

If, on the other hand, the monitored current is greater than the current threshold value, a trip occurs **144** and the motor is disconnected at step **146** and the motor begins to coast down to a stop. According to one embodiment, current trip tuning subroutine **130** identifies a current trip **144** if the monitored current is greater than the current threshold value over a certain duration of time, where the duration may be defined as a fraction of a second, such as 0.2 or 0.5 seconds, in such a way as to avoid nuisance interruption due to noise or other spurious event. Disconnection of the motor is accomplished by discontinuing the triggering or firing of switching devices **68-72**, thus electrically isolating the motor terminals from the line voltage. At step **148** a representative value of voltage is measured across the motor terminals at the time of disconnect and during the time period as the motor slows or coasts to a stop. The representative value may be a peak value, or an rms value, for instance. The monitored representative value of voltage is used to determine the speed of the motor. The motor speed may be used as a factor for determining the time needed to wait before a restart, as explained in more detail below. Additionally, the monitored motor speed contains information concerning the system load and inertia, which may be used to generate refined operating parameters, for diagnosis and debugging, and other functions. During step **150** technique **96** maintains a wait step. The wait step continues until the motor has stopped, which can be determined in a number of ways, such as a set time (such as 1 minute), or extrapolated from monitoring the representative value of motor voltage. The duration of the wait step can optionally be lengthened based on input from temperature sensing unit **92**, for instance until the temperature reading is below a threshold devised for safe subsequent operation of the unit. Further, the wait step can include an optional input from the user, such that the restart occurs only with the acquiescence of the user.

Optionally, at step **152** (shown in phantom), technique **96** determines whether the current trip was an "early trip." A current trip may be determined to be an "early trip" if the trip occurs before a first time threshold in the trial run or within a predetermined time period following initiation of the trial run, such as, for example, within the first second of the trial run. If the current trip did not occur within the predetermined time period **154** (that is, the current trip occurs after the first time threshold), technique **96** proceeds directly to step **156** to extend the ramp time. On the other hand, if the current trip did occur before the first time threshold in the trial run **158**, the voltage was too high at the beginning of the start-up operation. To maintain the voltage near its initial value for a longer time period and prevent a current trip in a subsequent run, the initial torque may be reduced at optional step **160** (shown in phantom) and, optionally, the ramp time may be lengthened at step **152**, as described in more detail with respect to FIG. **7**. According to various embodiments, technique **96** may be configured to proceed to step **156** and extend the ramp time following step **160** or, alternatively, bypass step **160** and proceed directly to step **142**.

At step **156**, technique **96** extends the ramp time, t_ramp, for use in the next trial run. According to various embodiments, the ramp time, t_ramp, may be increased from the previous value by a predefined scalar value or multiplication factor according to a look-up table, as examples. Optionally, in extending the ramp time, technique **96** may take into account how long after the trial run was initiated that the trip occurred. If the trip occurred very soon after the trial run was initiated, such as, for example, within one second of initiating the trial run, technique **96** may also decrease the initial torque factor for the subsequent trial run. Similar to the ramp time, the amount of decrease in torque factor may be determined from a look-up table or according to a predetermined function. After the extended ramp time is determined, tuning algorithm subroutine **130** ends at step **142**.

As explained above, after an overcurrent condition is detected as a result of the selected operating parameters for a given trial run, current trip tuning subroutine **130** may take a number of actions to modify the operating parameters of the start-up profile used for the subsequent trial run, namely lengthening the ramp time and/or reducing the initial torque. To illustrate these options in more detail, FIG. **7** includes an exemplary initial start-up profile **162** illustrated in terms of voltage (or torque factor) applied to the motor versus time for a first trial run and three exemplary start-up profiles **164**, **166**, **168** for a subsequent trial run after an overcurrent condition is detected as a result of an attempted motor start using initial start-up profile **162**. Start-up profile **164** illustrates a case where the subsequent trial run is defined to have a reduced initial torque factor and the same ramp time as the first trial run. Start-up profile **166** defines a subsequent trial run having an increased ramp time from the first trial run, but where the initial torque factor remains unchanged. Start-up profile **168** illustrates a case where both the initial torque factor is reduced and the ramp time is increased between the first trial run and the subsequent trial run.

To determine which start-up profile to follow for the subsequent trial run, current trip tuning subroutine **130** determines when the trip occurred during previous trial run. If the trip did not occur early in the start-up attempt, such as after time **170**, current trip tuning subroutine **130** increases the ramp time from time **172** to time **174** while maintaining the initial torque factor **176** for the subsequent trial run, as illustrated in start-up profile **166**.

Because start-up profile **166** is only marginally below the initial start-up profile **162**, merely increasing the ramp time may not be sufficient to prevent an overcurrent condition from occurring in the subsequent trial run if the current trip occurred early in the trial run. When an overcurrent condition is detected early on during the start-up attempt using initial start-up profile **162**, such as prior to time **170**, current trip tuning subroutine **130** may reduce the initial torque factor for the subsequent trial run, as illustrated by start-up profiles **164** and **168**. Reducing the initial torque factor for the subsequent trial run reduces the voltage applied to the motor early on. In a preferred embodiment, subroutine **130** reduces the initial torque value **176** to a value decreased initial torque factor **178** while maintaining the initial ramp time **172**. Alternatively, subroutine **130** may decrease the initial torque factor and also increase the ramp time from initial ramp time **172** to an increased ramp time **174**, as illustrated in start-up profile **168**.

According to one embodiment, in defining the initial torque factor and ramp time for the subsequent trial run after an early trip is detected, current trip tuning algorithm subroutine **130** is configured to determine the torque factor **182** at time **170** based on the slope of start-up profile **166** and compare the determined torque factor to the corresponding torque factor **180** at time **170** from the first or initial trial run **162**. If torque factor **182** differs from torque factor **180** by more than a predetermined amount, such as 5%, current trip tuning algorithm subroutine **130** will select subsequent start-up profile **166** for the subsequent trial run. If torque factor **182** does not differ from **180** by more than the predetermined amount, current trip tuning algorithm subroutine **130** selects either start-up profile **164** or start-up profile **168** for the subsequent start up profile.

Optionally, current trip subroutine **130** may also be configured to monitor for a temperature trip or condition wherein the temperature of the soft starter as monitored by temperature sensing unit **92** (FIG. **2**) exceeds a predetermined threshold value during operation. If such an overtemperature trip occurs, subroutine **130** may be further configured to disconnect the motor and adjust operating parameters in a similar manner as described above with respect to a current trip situation. In such instances, the wait step **150** may be maintained until the monitored soft starter temperature has reached an acceptable level (as indicated by feedback from temperature sensing unit **92**).

During the trial run, technique **96** also operates a no start tuning subroutine **132**, the details of which are illustrated in FIG. **8**. Subroutine **132** begins at step **184** and determines whether the motor reached full operating speed during the time duration of the trial run at step **186**. If the motor did reach full speed during the trial run **188**, the no start tuning algorithm subroutine **132** ends at step **190**. If, on the other hand, the motor did not reach full speed during the trial run **192**, the motor is disconnected at step **194** at the end of the trial run duration and a representative value of motor voltage after the motor is disconnected is monitored at step **196**.

At step **198** the monitored a representative value of motor voltage after the motor disconnect is compared to a threshold. In one embodiment, the threshold voltage value is selected as a percentage of the full line voltage. If the monitored motor voltage is greater than the threshold voltage value **200**, the current value of the initial torque factor is maintained at its existing setting for a subsequent trial run at step **202**. If the monitored motor voltage is less than the threshold voltage value **204**, the initial torque factor is increased for the next trial run at step **206**.

According to one embodiment, no start tuning algorithm subroutine **132** increases the initial torque factor at step **206** in accordance with a look-up table. An exemplary look-up table, TABLE 1, is provided below. TABLE 1 is merely an example of one possible combination of torque and kick start duration values and is not intended to limit the scope of the invention. As one skilled in the art will recognize, torque factor values and kick start duration, as well as the number of trial runs in a general operation mode and a kick start mode and prior to the indication of a flag may be varied based on a given application. As shown, the initial torque factor may be incrementally increased for a first number of trial run iterations by a predefined amount, such as, for example, an additional ten percent of the initial torque value without a kick start. If the motor does not start after the first number of trial run iterations, subroutine **132** may initiate a kick start operation and selectively change the initial torque, kick start duration, and/or initial ramp torque in subsequent trial runs if the motor does not start. If the motor does not start after a certain number of trial run iterations, subroutine **132** may be programmed to indicate a flag or overload condition at the end **190** of the subroutine.

TABLE 1

Trial Run	Initial Torque Factor	Kick Start Duration	Initial Ramp Torque Factor
i = 1	50%	0	0
i = 2	60%	0	0
i = 3	70%	0	0
i = 4	75%	1 second	70%
i = 5	75%	2 seconds	70%
i = 6	80%	2 seconds	70%

Referring again to FIG. **3**, following the end of the trial run at step **134** technique **96** determines whether the trial run achieved a successful start at step **208**. A successful start may be determined to have occurred **210** if the back emf of the motor is above a threshold value or the motor has reached final speed. The motor can subsequently start successfully

based on the operating parameters of the trial run, and an over-current and/or over-temperature condition did not occur during the trial run. Final speed may be detected by a drop in notch depth voltage (measured as a voltage across the soft starter switching devices), a drop in current below a threshold, a peak or inflexion in the torque profile, or a combination of the three, according to various embodiments.

A peak torque typically occurs in induction machines shortly before final speed is reached, and, as such, is an early indicator of the system being about to reach final speed. The detection of the peak torque is determined as a function of nominal torque, such as, for example, nominal torque multiplied by a scalar coefficient. According to one embodiment, technique **96** may be configured to determine a torque estimate to sense whether the motor is approaching full speed. Estimating the torque provides additional information for use in tuning the notch function, including an early indication that the motor will reach final speed based on a current notch function. To determine the torque estimate, the motor stator resistance is obtained using one of a number of methods. For example, the motor stator resistance may be obtained from the motor manufacturer, measured separately off-line, or estimated using a known technique. Alternatively, the motor stator resistance may be estimated by turning two thyristors on in two of the motor phases when the motor is at a standstill. As the voltage across these two phases is close to zero and decreasing, turning the thyristors on produces a short current waveform in these two phases. The voltage and current are measured during this conduction to provide the desired stator winding resistance value. The stator winding resistance value, R_s, is then used to calculate the stator flux vector, Ψ_s, according to:

$$\Psi_s=\int(u_s-R_s i_s)dt \quad \text{(Eqn. 1)},$$

where u_s are the measured stator voltages, i_s are the measured stator currents applied to the motor. The electromagnetic torque, T_e, may then be estimated according to:

$$T_e=p_n(i_{s\beta}\Psi_{s\alpha}-i_{s\alpha}\Psi_{s\beta}) \quad \text{(Eqn. 2)},$$

where p_n is the number of pole pairs and the subscripts α and β reflect components on two axes in quadrature, such as d-q axes.

If technique **96** determines at step **208** the trial run did not result in a successful start **212**, technique **96** returns to step **114** to start a subsequent trial run. During the subsequent trial run, the switching devices of the soft starter are controlled according to a motor start-up profile defined by one or more updated operating parameters (e.g., ramp time and/or initial torque factor) determined from the no start tuning subroutine **132** and/or the current/temperature trip tuning subroutine **130** run during the previous trial run.

Technique **96** continues to modify the operating parameters for the motor start-up profile or notch width function during subroutines **130** and **132** during a given trial run and use those modified values to define an updated notch width function for operating the soft starter during the next trial run until a successful start is determined at step **208** or until one of subroutines **130** or **132** outputs a flag. A flag may be indicated from still not reaching full speed even with the highest possible value of initial torque (for example condition "trial run i=6" in Table 1), or from other indicators such as having exceeded a predetermined maximum number of attempted starts. Along with the indication of a flag, technique **96** may make information available to the user or to other algorithms concerning the start attempt, to help in providing a diagnosis, identifying a fault condition, if any, and enabling a path to achieve successful system starts in the future.

When a successful start is determined to have occurred during the trial run **210** and the user provided a desired start time at step **110**, technique **96** continues to the final stage of the automated tuning technique wherein the operating parameters may be adjusted to achieve a smooth run with less strain on the load and/or achieve a motor start-up within a time period closer to the user desired start time, t_user_start. To do this, technique **96** determines the actual time it took for the motor to start during the trial run (referred to herein as t_start) at step **214**. Technique **96** then initiates a ramp time tuning subroutine **216**, described in detail with respect to FIG. **9**.

Referring now to FIG. **9**, the sub-steps of start time tuning subroutine **216** are illustrated according to one embodiment of the invention. Subroutine **216** selectively adjusts the present value of the ramp time, t_ramp, so that the time it takes the motor to reach final speed is closer to the user desired star time, t_user_start. Because an actual start may only occur within a limited range of time values, subroutine **216** is configured to make small adjustments to the start time and, in one embodiment, only adjust the ramp time, t_ramp, a single time. In the event an overcurrent occurs during the subsequent trial run as a result of the updated ramp time, technique **96** reverts to the ramp time used in the previous trial run for subsequent motor starts.

Subroutine **216** begins at step **218** and determines whether the actual start time, t_start, is within a given range of the user input start time at step **220**, where the given range is defined between an upper threshold and a lower threshold. As one example, the given range may be defined between an upper threshold of approximately 120 percent of the user input start time and a lower threshold of approximately 80 percent of the user input start time. However, the upper and lower threshold values may be varied in alterative embodiments. If subroutine **216** determines that the actual start time is within the predefined time range **222**, subroutine **216** maintains the existing ramp time setting for the subsequent trial run at step **224** and ends at step **226**.

If, on the other hand, the actual start time is not within the predefined range **228**, subroutine **216** determines whether the actual start time is greater than the upper threshold of the predefined range or less than the lower threshold of the predefined range at step **230**. If the actual start time is greater than the upper threshold **232**, subroutine **216** decreases the ramp time, t_ramp, for the next trial run at step **234**. If the actual start time is less than the lower threshold of the predefined range **236**, subroutine **216** increases the ramp time, t_ramp, for the next trial run at step **238**. According to various embodiments, subroutine **216** increases or decreases the ramp time, t_ramp, at steps **234** and **238** according to a predefined function. Following steps **234** or **238** the subroutine ends at step **226**.

Referring again to FIG. **3**, technique **96** ends at step **240** and the operating parameters defined during subroutines **130**, **132** (and subroutine **216** if applicable) are stored for use in the next motor start. During continued operation of soft starter, the controller continues to run the auto-tuning algorithm described herein and continuously tune the operating parameters of the notch width profile used to operate the soft starter.

Further, technique **96** can be integrated within, or integrate within its steps, a number of other algorithms and functions, such as diagnostic functions, protection functions, current limiting functions, energy monitoring functions, and the like, that technique **96** can work cooperatively with, or enhance by such methods and steps as information exchange and the like. As such technique **96** may be embedded within, or encompass, a larger or much larger soft starter control system.

A technical contribution for the disclosed method and apparatus is that it provides for a controller-implemented technique for generating and tuning the operating parameters that define the notch width profile operating a motor soft starter. The technique defines a first notch width profile, monitors operating conditions during an initial motor start attempt operated according to the first notch width profile, and automatically updates one or more parameters of the notch width profile. Accordingly, the technique disclosed herein automatically defines the operating parameters for a soft starter with minimal user input and, in some embodiments, absent any user input. Since the disclosed technique automatically recalculates and adjusts the motor start-up function used to operate the soft starter over time, the technique increases the probability of a smooth motor start and accounts for load changes over time.

One skilled in the art will appreciate that embodiments of the invention may be interfaced to and controlled by a computer readable storage medium having stored thereon a computer program. The computer readable storage medium includes a plurality of components such as one or more of electronic components, hardware components, and/or computer software components. These components may include one or more computer readable storage media that generally stores instructions such as software, firmware and/or assembly language for performing one or more portions of one or more implementations or embodiments of a sequence. These computer readable storage media are generally non-transitory and/or tangible. Examples of such a computer readable storage medium include a recordable data storage medium of a computer and/or storage device. The computer readable storage media may employ, for example, one or more of a magnetic, electrical, optical, biological, and/or atomic data storage medium. Further, such media may take the form of, for example, floppy disks, magnetic tapes, CD-ROMs, DVD-ROMs, hard disk drives, and/or electronic memory. Other forms of non-transitory and/or tangible computer readable storage media not listed may be employed with embodiments of the invention.

A number of such components can be combined or divided in an implementation of a system. Further, such components may include a set and/or series of computer instructions written in or implemented with any of a number of programming languages, as will be appreciated by those skilled in the art. In addition, other forms of computer readable media such as a carrier wave may be employed to embody a computer data signal representing a sequence of instructions that when executed by one or more computers causes the one or more computers to perform one or more portions of one or more implementations or embodiments of a sequence.

Therefore, according to one embodiment of the invention, a motor control device that is electrically connectable to an AC motor includes a plurality of switching devices comprising at least one switch corresponding to a respective phase of the AC motor and a controller. The controller is programmed to define a motor start-up function based on a rated current of the AC motor, the motor start-up function comprising an initial torque factor and an initial ramp time, and trigger the plurality of switching devices according to the motor start-up function to inject current into the AC motor during a first trial run. The controller is also programmed to monitor operating conditions of at least one of the AC motor and the motor control device during the first trial run, modify the motor start-up function based on the monitored operating conditions, and trigger the plurality of switching devices according to the modified motor start-up function to inject current into the AC motor during a subsequent trial run.

According to another embodiment of the invention, a method for controlling a AC motor includes providing a motor control device having a plurality of switching devices to condition voltage and current to the AC motor, providing a sensor system to sense operating conditions of the motor control device and the AC motor, and coupling the motor control device between an AC power source and the AC motor. The method also includes automatically generating a first notch width function from an initial set of operating parameters, controlling the plurality of switching devices according to the first notch width function during a first motor start-up attempt, automatically modifying the first notch width function based on feedback received from the sensor system during the first motor start-up attempt, and controlling the plurality of switching devices according to the modified notch width function during a second motor start-up attempt.

According to yet another embodiment of the invention, a soft-starter is provided to control transmission of voltage and current from an AC power source to an induction motor. The soft-starter includes a plurality of supply lines, each supply line corresponding to a phase in the induction motor and a plurality of solid-state switches comprising at least one solid-state switch located on each of the plurality of supply lines to condition a motor line voltage and a phase current to the induction motor. The soft-starter also includes a processor programmed to trigger the plurality of solid-state switches according to a motor start-up function and automatically modify at least one operating parameter of the motor start-up function absent operator input. The processor is further programmed to automatically update the motor start-up function using the modified at least one operating parameter and trigger the plurality of solid-state switches according to the updated motor start-up function.

Embodiments of the present invention have been described in terms of the preferred embodiment, and it is recognized that equivalents, alternatives, and modifications, aside from those expressly stated, are possible and within the scope of the appending claims.

What is claimed is:

1. A motor control device electrically connectable to an AC motor, the motor control device comprising:

a plurality of switching devices comprising at least one switch corresponding to a respective phase of the AC motor; and

a controller programmed to:

define a motor start-up function based on a rated current of the AC motor, the motor start-up function comprising an initial torque factor and an initial ramp time;

trigger the plurality of switching devices according to the motor start-up function to inject current into the AC motor during a first trial run;

monitor operating conditions of at least one of the AC motor and the motor control device during the first trial run;

modify the motor start-up function based on the monitored operating conditions; and

trigger the plurality of switching devices according to the modified motor start-up function to inject current into the AC motor during a subsequent trial run.

2. The motor control device of claim **1** wherein the controller is further programmed to define and modify the motor start-up function absent operator input.

3. The motor control device of claim **1** wherein the controller is further programmed to:

trigger the plurality of switching devices according to the motor start-up function for a predefined duration;

discontinue triggering the plurality of switching devices to disconnect the AC motor from the AC power source if the AC motor has not reached full speed at the end of the predefined duration;

monitor a voltage of the AC motor at the end of the predefined duration; and

modify the motor start-up function by increasing the initial torque factor if the monitored voltage is below a threshold.

4. The motor control device of claim **1** wherein the controller is further programmed to:

receive feedback from a current sensor during the first trial run;

identify a current trip based on the received feedback; and

modify the motor start-up function by increasing the initial ramp time if the current trip is identified.

5. The motor control device of claim **1** wherein the controller is further programmed to:

identify a current trip during the first trial run;

modify the motor start-up function by decreasing the initial torque factor if the identified current trip occurs before a first time threshold in the first trial run; and

modify the motor start-up function by increasing the initial ramp time if the identified current trip occurs after the first time threshold.

6. The motor control device of claim **1** wherein the controller is further programmed to:

determine whether the AC motor reached full speed during the first trial run; and

if the AC motor reached full speed during the first trial run:

determine an actual start time for the AC motor;

compare the actual start time to the initial ramp time; and

modify the motor start-up function by selectively adjusting the the initial ramp time based on the comparison.

7. The motor control device of claim **1** wherein the controller is further programmed to modify the motor start-up function by defining at least one of an initial kick-start torque factor and a kick-start duration.

8. The motor control device of claim **1** wherein the controller is further programmed to modify the motor start-up function by adjusting at least one of the initial torque factor and the initial ramp time based on a look-up table.

9. The motor control device of claim **1** wherein the initial torque factor and the initial ramp time are defined by a notch width profile.

10. A method for controlling an AC motor comprising:

providing a motor control device having a plurality of switching devices to condition voltage and current to the AC motor;

providing a sensor system to sense operating conditions of the motor control device and the AC motor;

coupling the motor control device between an AC power source and the AC motor;

automatically generating a first notch width function from an initial set of operating parameters;

controlling the plurality of switching devices according to the first notch width function during a first motor start-up attempt;

automatically modifying the first notch width function based on feedback received from the sensor system during the first motor start-up attempt; and

controlling the plurality of switching devices according to the modified notch width function during a second motor start-up attempt.

11. The method of claim **10** wherein modifying the first notch width function comprises at least one of modifying a ramp time of the first notch width function and modifying an initial torque factor of the first notch width function.

12. The method of claim **10** further comprising:

detecting an overcurrent condition during the first motor start-up attempt; and

automatically modifying the first notch width function by extending a ramp time of the first notch width function based on the detected overcurrent condition.

13. The method of claim **10** further comprising:

detecting an overcurrent condition during the first motor start-up attempt; and

automatically modifying the first notch width function by reducing an initial torque factor of the first notch width function.

14. The method of claim **10** further comprising automatically modifying the first notch width function to include a kick-start duration and an initial kick-start torque factor.

15. The method of claim **10** further comprising:

determining if the AC motor reached a final speed during the first trial run; and

if the AC motor did not reach the final speed, automatically modifying the first notch width function by increasing an initial torque factor of the first notch width function.

16. A soft-starter to control transmission of voltage and current from an AC power source to an induction motor, the soft-starter comprising:

a plurality of supply lines, each supply line corresponding to a phase in the induction motor;

a plurality of solid-state switches comprising at least one solid-state switch located on each of the plurality of supply lines to condition a motor line voltage and a phase current to the induction motor;

a sensor system configured to monitor at least one of a current and a voltage of the plurality of supply lines; and

a processor programmed to:

trigger the plurality of solid-state switches according to a motor start-up function;

receive feedback from the sensor system;

automatically modify at least one operating parameter of the motor start-up function absent operator input based on the received feedback;

automatically update the motor start-up function using the modified at least one operating parameter; and

trigger the plurality of solid-state switches according to the updated motor start-up function.

17. The soft-starter of claim **16** wherein the processor is further programmed to: detect a current trip; identify a time that the detected current trip occurred; and if the time is above a threshold, extend a ramp time of the motor start-up function based on the detected current trip; and if the time is below the threshold, reduce an initial torque factor of the motor-start-up function based on the detected current trip.

18. The soft-starter of claim **17** wherein the processor is further programmed to extend the ramp time of the motor start-up function based on the detected current trip if the time is below the threshold.

19. The soft-starter of claim **17** wherein the processor is further programmed to reduce an initial torque factor of the motor start-up function based on the detected current trip.

20. The soft-starter of claim **16** wherein the processor is further programmed to automatically update the motor start-up function to include a kick-start duration and an initial kick-start torque factor.

21. The soft-starter of claim **16** wherein the processor is further programmed to define the motor start-up function based on a rated current of the induction motor.

22. The soft-starter of claim 16 wherein the processor is further programmed to:

trigger the plurality of solid state switches according to the motor start-up function for a predetermined duration;

estimate a speed of the induction motor at the end of the predetermined duration;

trigger the plurality of solid state switches according to the motor start-up function during a subsequent motor start if the estimated speed is greater than a threshold; and

trigger the plurality of solid state switches according to the updated motor start-up function during the subsequent motor start if the estimated speed is less than the threshold.

* * * * *